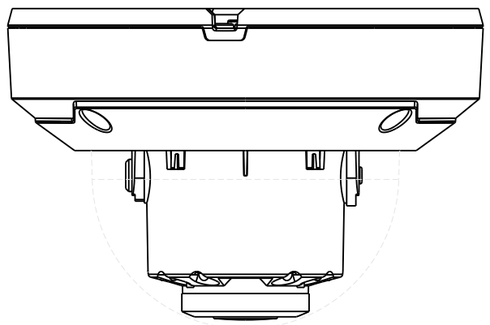

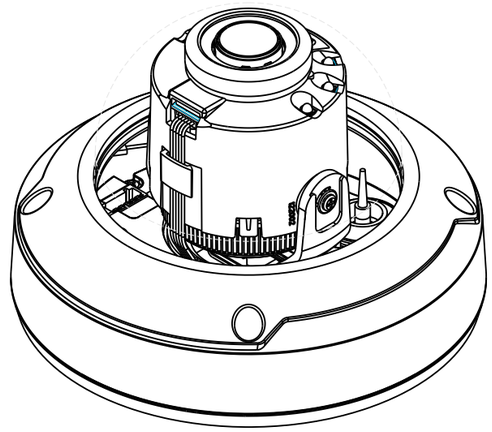

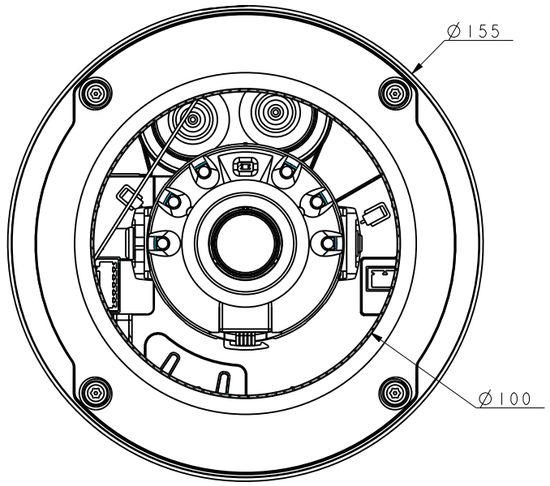

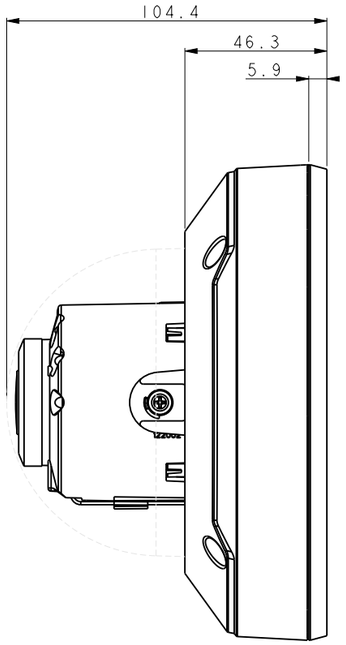

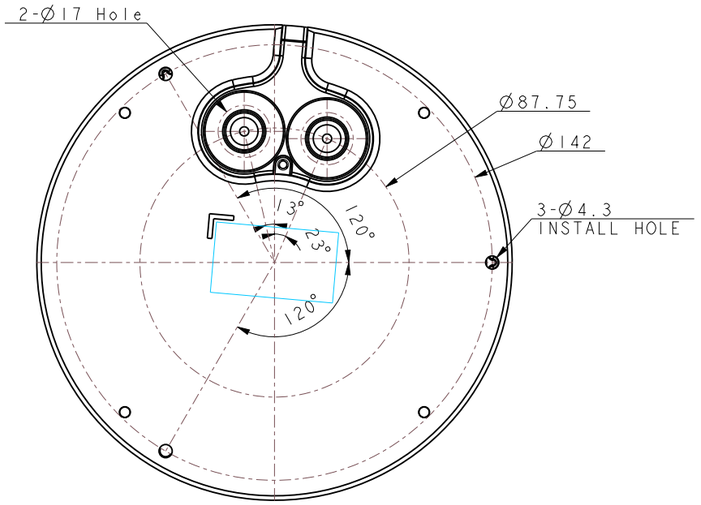

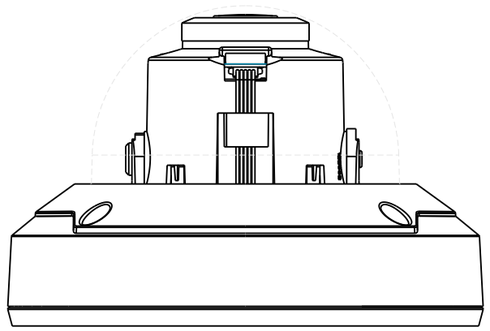

				Unit	Sheet	Scale
				mm, Kg-f	1 of 1	NS
				Model	DC-D4537HRXA / D4538WRA / D4538WRA-2 / D5531WRA #2 BRAND	
	26.04.15	Draft	LEE	Aseembly Name	LAYOUT, DC-D5531WRA	
Approved SONG	Checked SHIN	Designer LEE	Drafter LEE	Aseembly No	4XXXXX	

A3

IDIS CO.,LTD