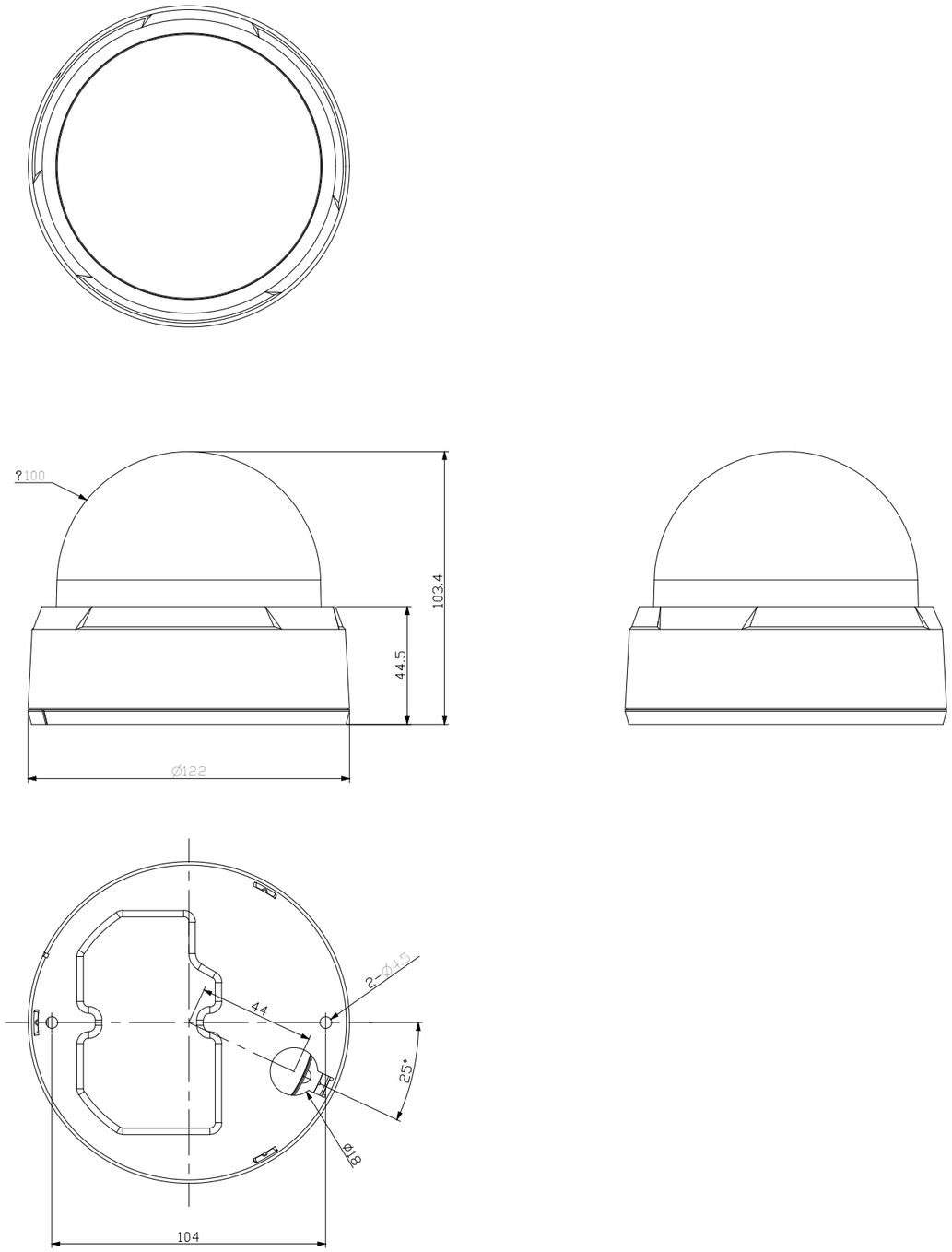

				Grade					Angle	Finish		Scale	
									-	Material			
				Tolerance Range( )									
				Dimension Grade	1	2	3	4	5	Heat Treatment			
				6 Under	0.1	0.1	0.1	0.2	0.4				
				6 - 30 Under	0.1	0.1	0.2	0.3	0.8	Surface Treatment			
				30 - 63 Under	0.1	0.2	0.3	0.5	1.2				
				63 - 250 Under	0.2	0.3	0.5	0.8	1.8	Part Name	DC-D4533RX		
				250 - 1000 Under	0.3	0.5	0.8	1.2	3.0				
				1000 - 2000 Under		0.8	1.2	1.8	5.0				
	20/07/13	신규	버전										
Approved	Checked	Designer	Drafter	Relative Part No						Part No			
송진규		장홍현	장홍현										

A1 IDIS CO.,LTD