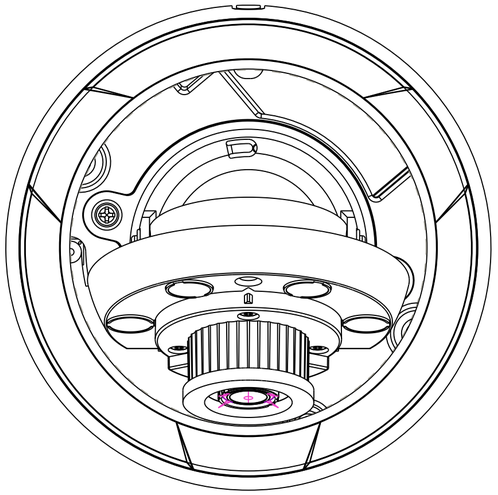

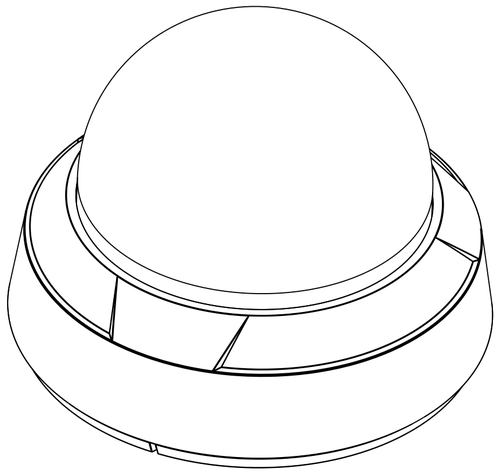

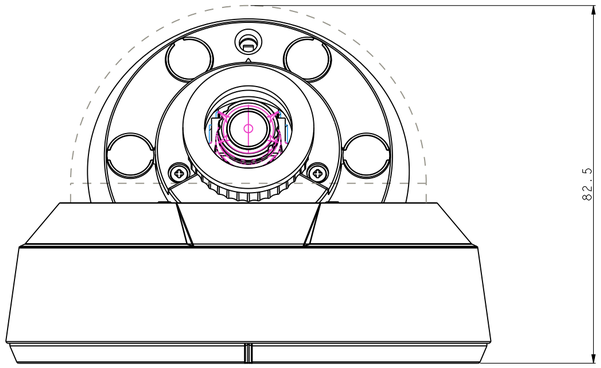

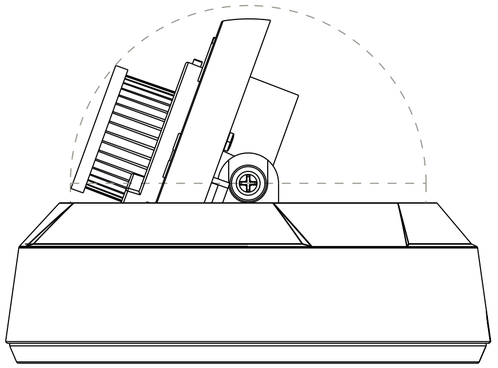

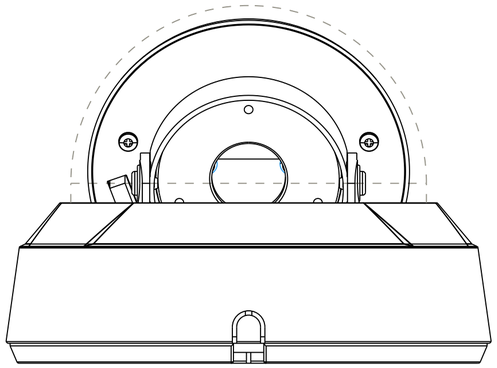

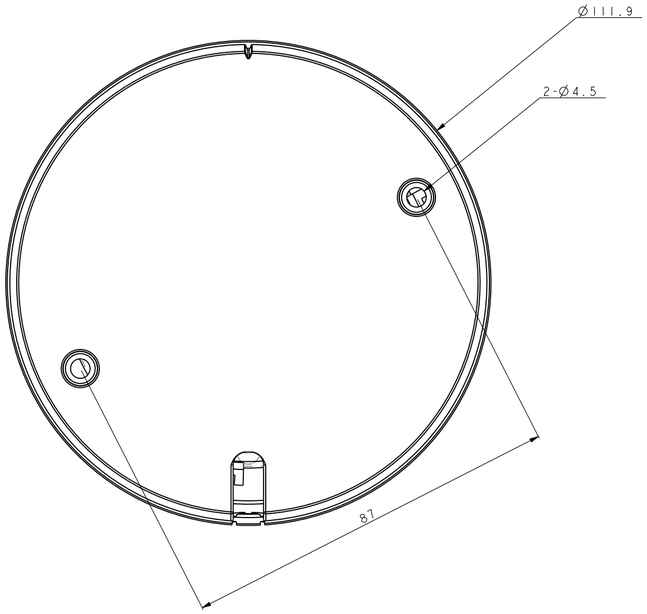

17.11.30	신규				
Approved	Checked	Designer	Drafter		
정경주		신민식	신민식		

Grade: 4등급

Angle: ±

Tolerance Range(±)

Dimension \ Grade	1	2	3	4	5
4 Under	0.1	0.1	0.1	0.2	0.5
4 ~ 16 Under	0.1	0.1	0.2	0.3	0.6
16 ~ 63 Under	0.1	0.2	0.3	0.5	1.2
63 ~ 250 Under	0.2	0.3	0.5	0.8	1.8
250 ~ 1000 Under	0.3	0.5	0.8	1.2	3.0
1000 ~ 2000 Under		0.8	1.2	1.8	5.0

Relative Part No

Finish

Scale: 1:1

Material

Heat Treatment

Surface Treatment

Part Name: LAYOUT NC-EP620-XIPI

Part No

A2 IDIS CO.,LTD