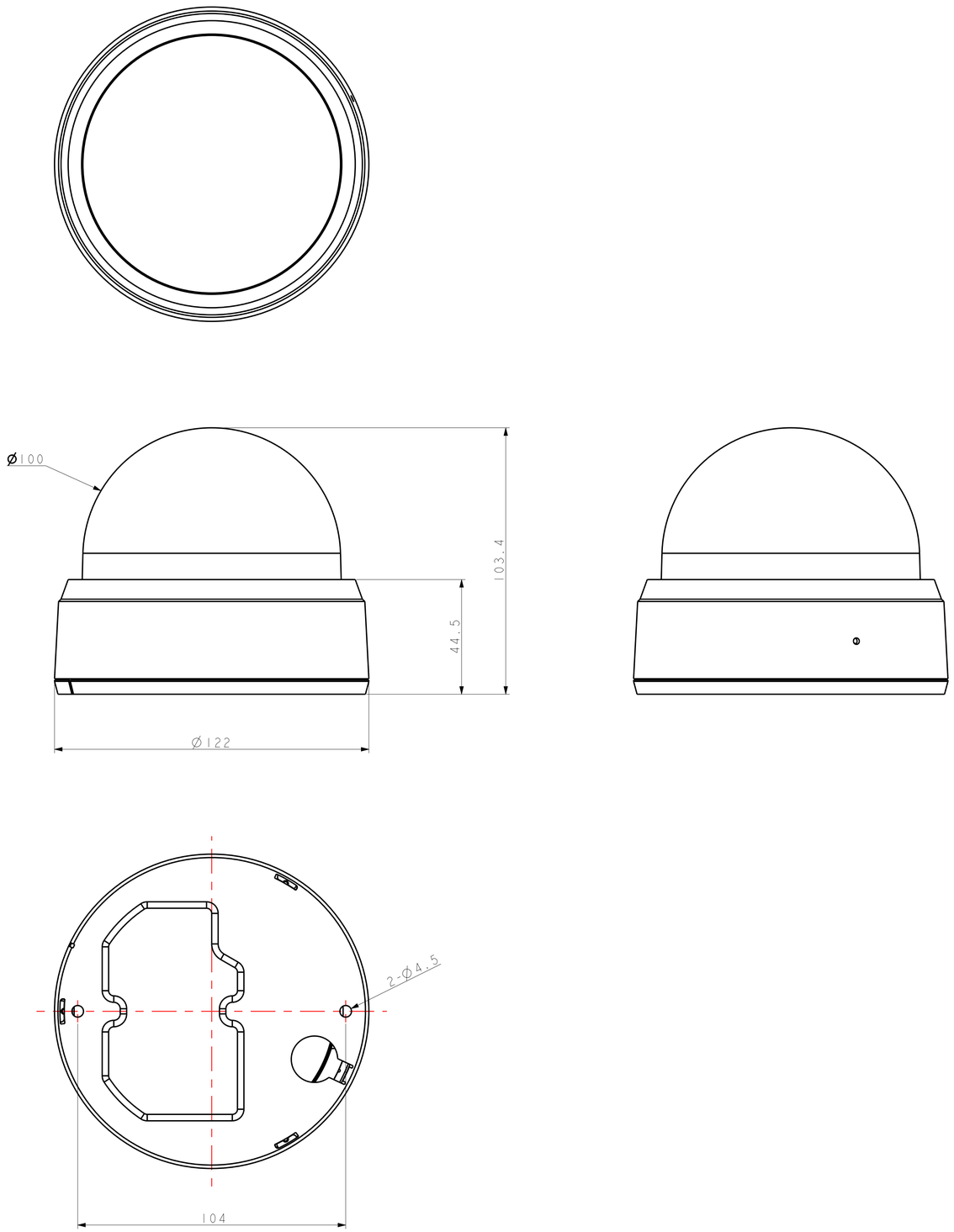

				Grade	Angle ±
				Tolerance Range(±)	
				Dimension mm	1 2 3 4 5
				4 Under	0.1 0.1 0.1 0.2 0.5
				4 ~ 16 Under	0.1 0.1 0.2 0.3 0.5
				16 ~ 63 Under	0.1 0.2 0.3 0.5 1.0
				63 ~ 250 Under	0.2 0.3 0.5 0.8 1.5
				250 ~ 1000 Under	0.3 0.5 0.8 1.2 3.0
20/07/13	신규		변경사	1000 ~ 2000 Under	0.8 1.2 1.8 5.0
Approved	Checked	Designer	Drafter	Relative	
송진규		장홍현	장홍현	Part No	

Finish	Scale
Material	
Heat Treatment	
Surface Treatment	
Part Name	DC-D4233RX
Part No	

A1 IDIS CO.,LTD