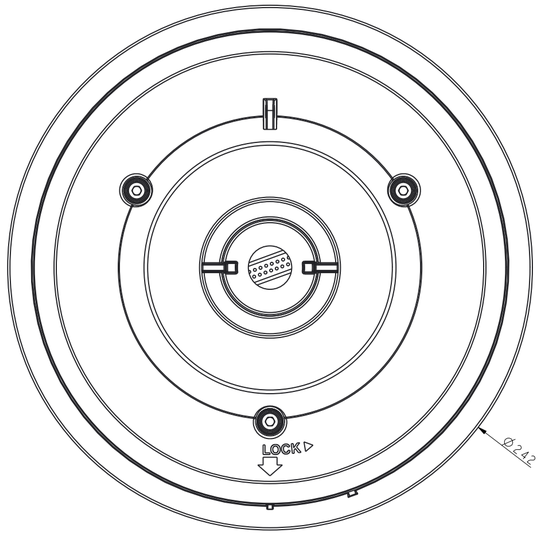

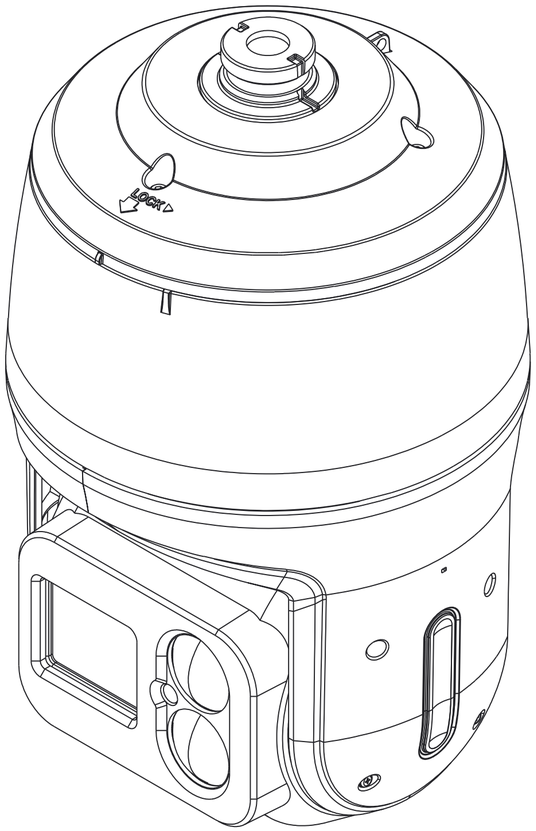

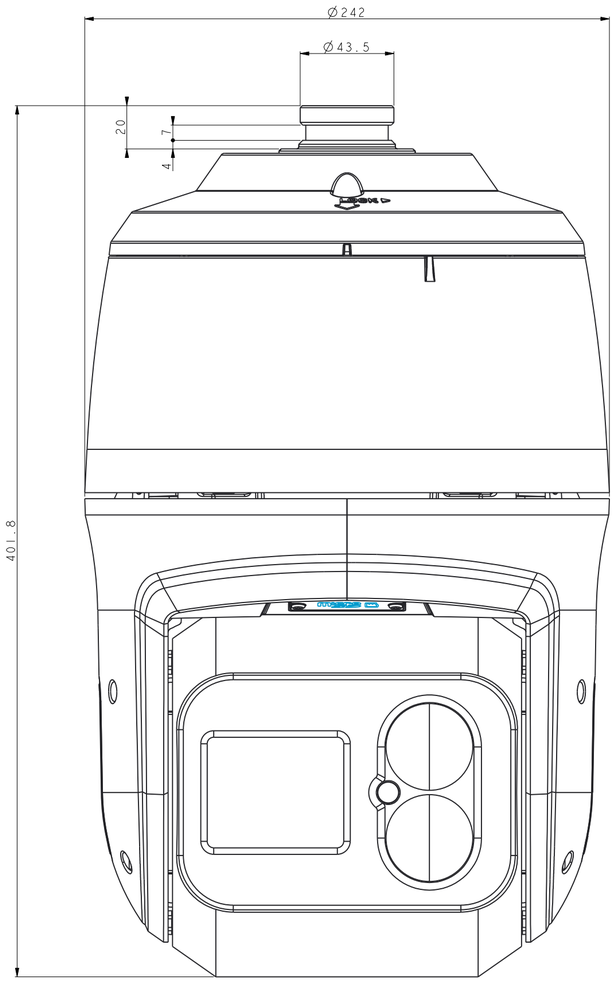

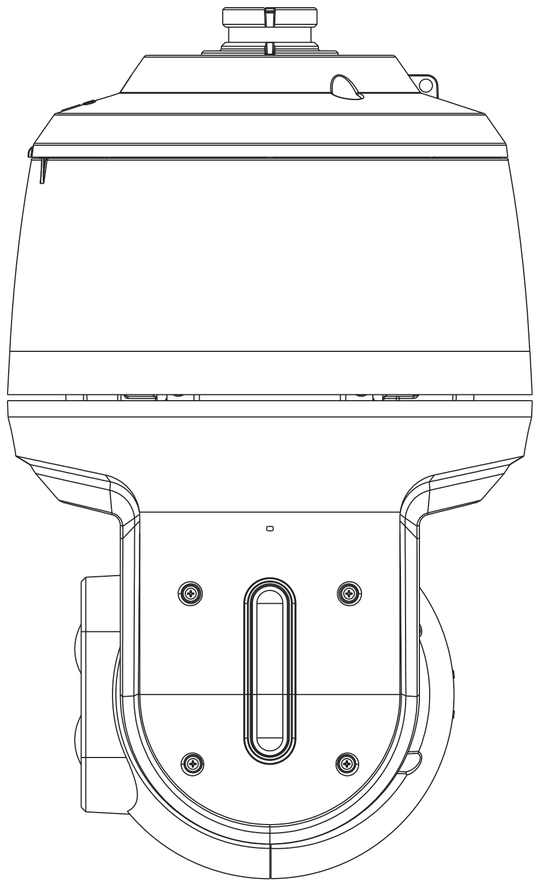

Model
DC-S6283HRXL
NC-S6283HRXL
DC-S8362HRXL

Scale 0.500