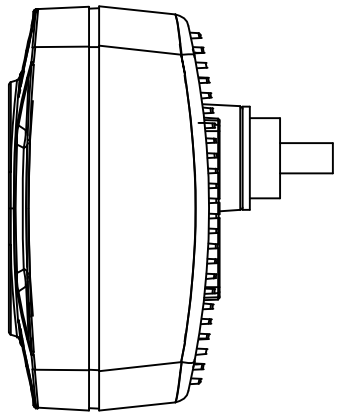

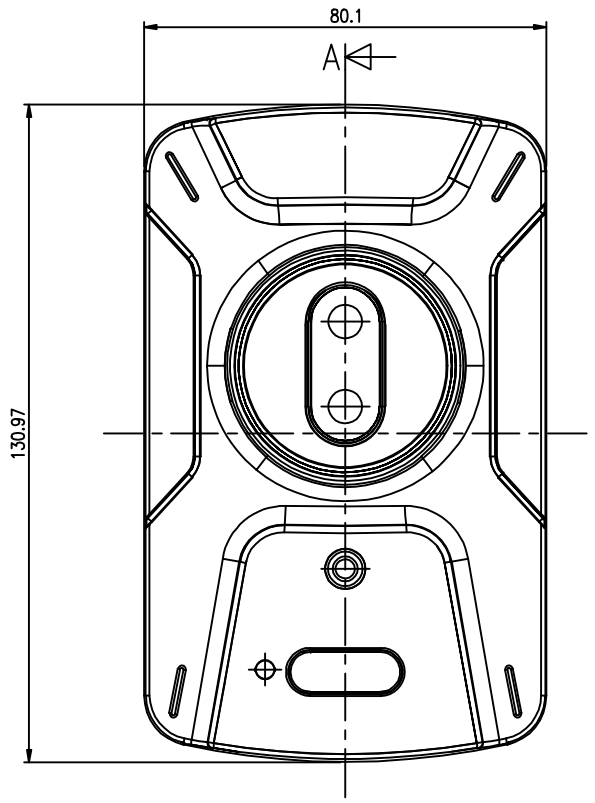

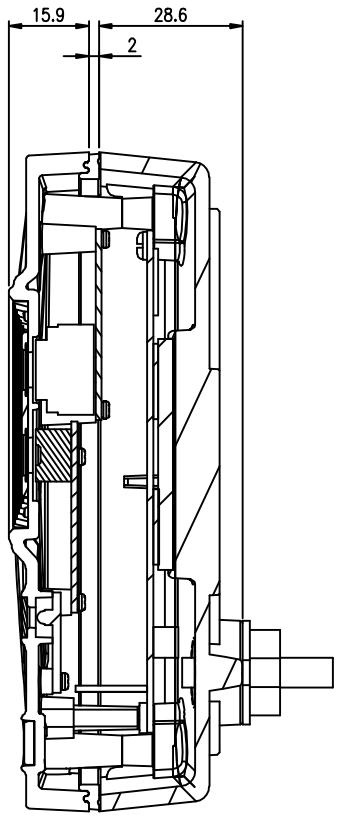
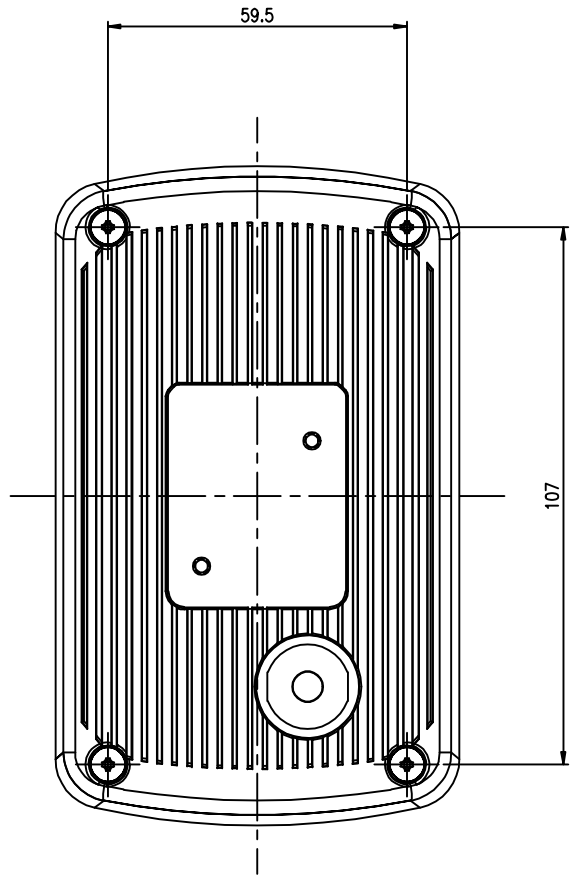
SECTION AA