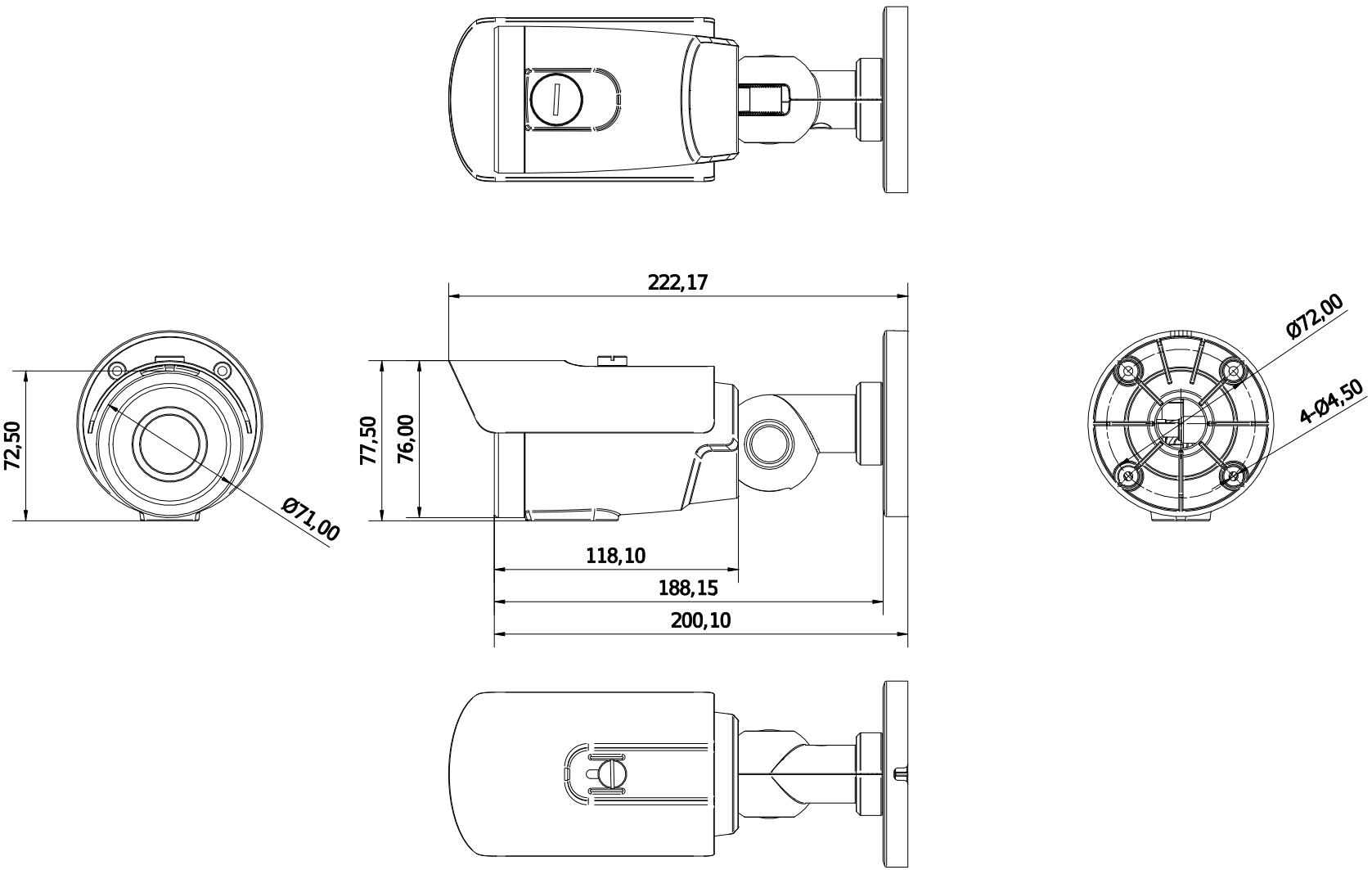

Designed by	Checked by	Approved by	Date		Date	
TTL					2019-06-20	

	Edition	Sheet
AUX65VF-MODEL_ASSY_20180117		1 / 1