양식 XXXX-XXXX

에치디프로(주)

A2(594x420)

Dwg.No.

Rev.	Description	Signature	Checked	Date

HD-IC364DML211P 외관도

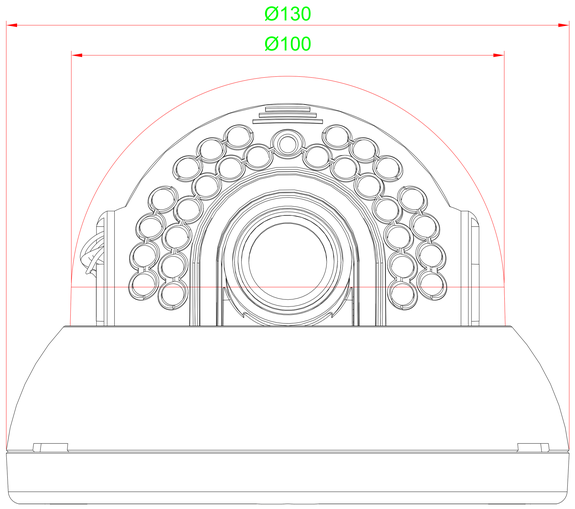

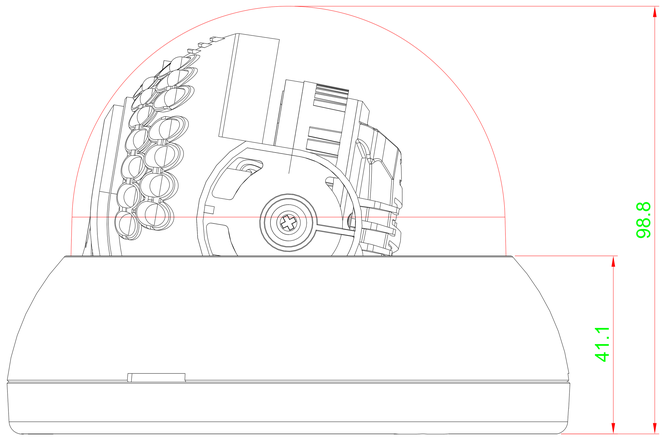

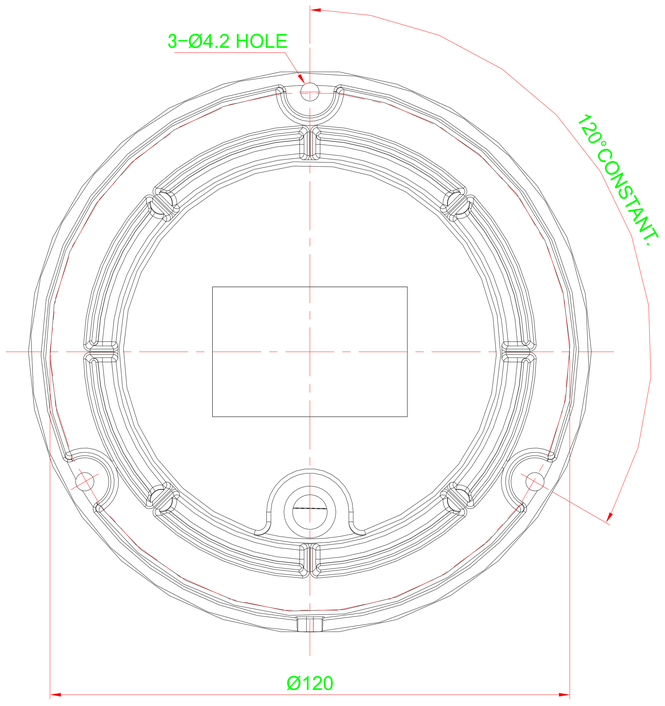

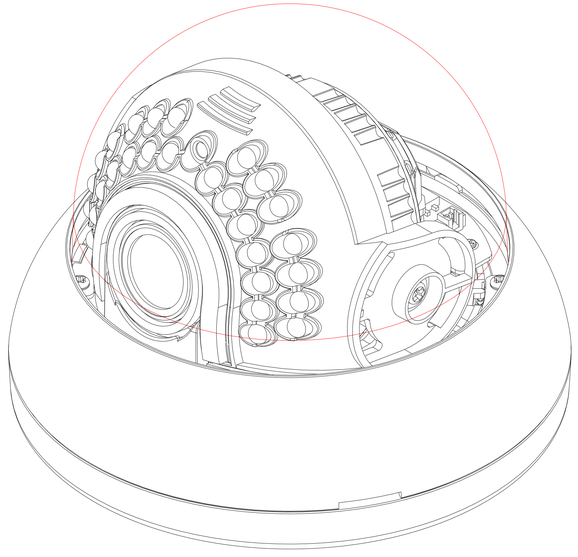

No.	Name	Q'TY	Material & Spec.	Reference

Part List

General Tolerance (Length / Angle)	Date		Model HD-IC364DML211P
	Dept.		Name HD-IC364DML211P 외관도
Material	Approved by		
	Checked by		Dwg. No. / Size
Finish & Color	Designed by		Item Code / A2
Saved File Name	Scale	Unit	HDPRO CO., LTD.
	Sheet of	Weight	