INDOOR

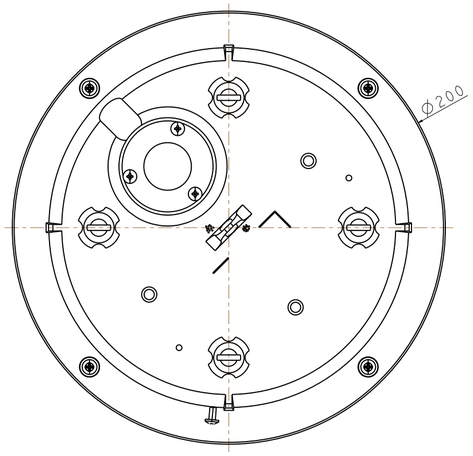

OUTDOOR

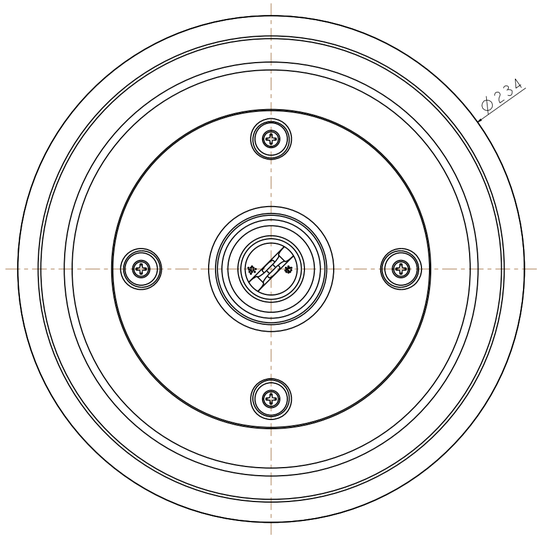

FLUSH (Inceiling)

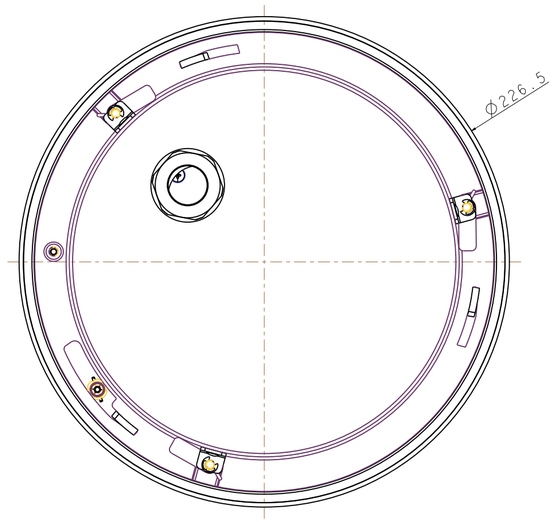

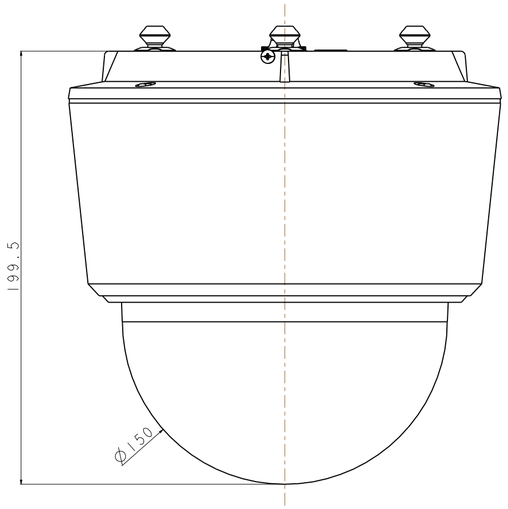

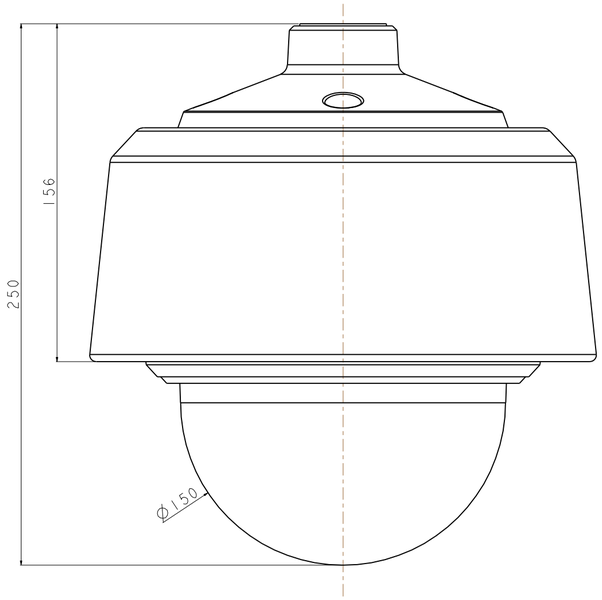

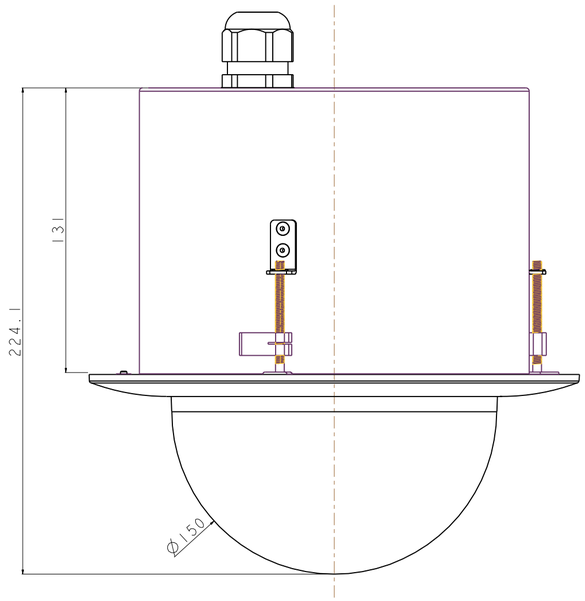

| | | |